- **Installation and wiring of luminaire must be in accordance with all applicabie local codes.**
- **Installation,inspection,and maintenance of luminaires should be performed by a qualified electrician.**
- **DO NOT make or alter any open holes in the luminaire Do not modify the luminaire.**
- **DO NOT install damaged product.**
- **Make sure electrical power is OFF before and during installation and maintenance.**
- **Make sure the equipment is properly grounded.**
- **Make sure the supply voltage is same as the rated fixture voltage.**

IEC 60598 | GB 7000 | IP66 | III | IK06 | ta45° C | S. Cx 0.038m²

1. Place the light on the mounting surface.

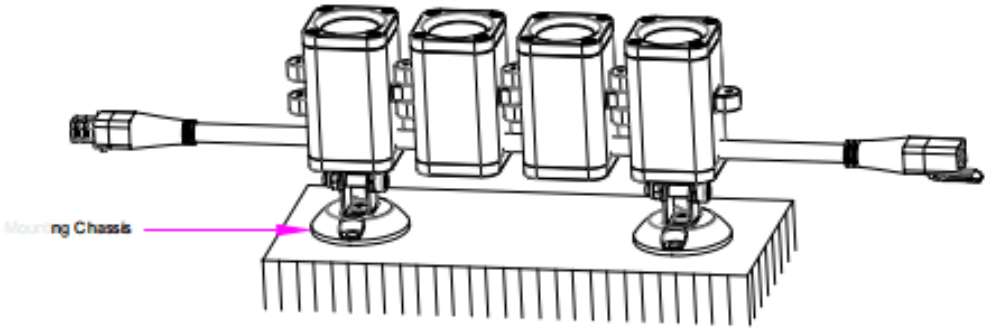

2. Fix the light to the mounting surface with self-tapping screws.

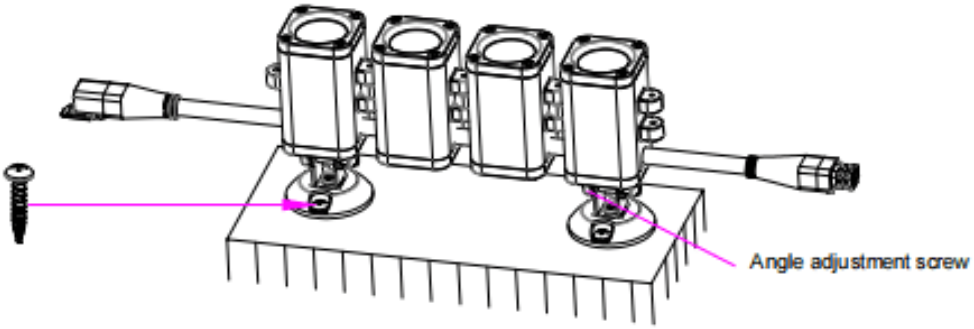

3. Light can be adjusted 140° from side to side.

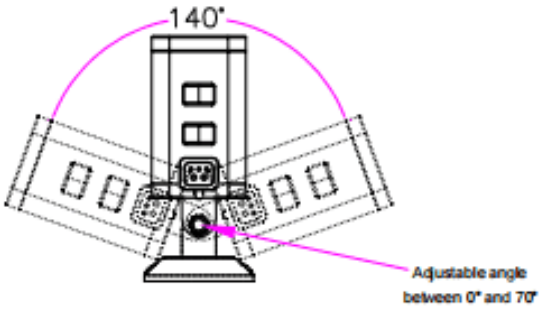

4. Installation position of each light where the first and last male and female waterproof connectors.

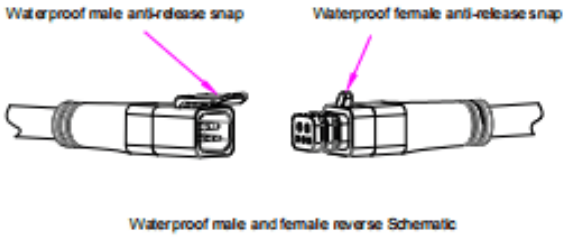

5. Waterproof connector need inserted into each other according to the direction until the clips snap into the slots.

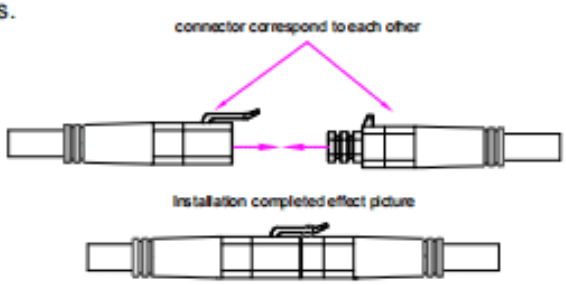

6. Pry the male connector upwards to prevent the release of the buckle and then apply force to the male and female connector horizontal movement in both directions to make them separate.

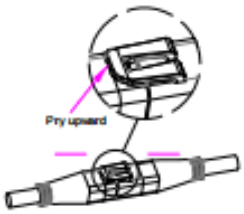

Llamp wiring diagram, wiring mode is series

Lighting wiring diagram:

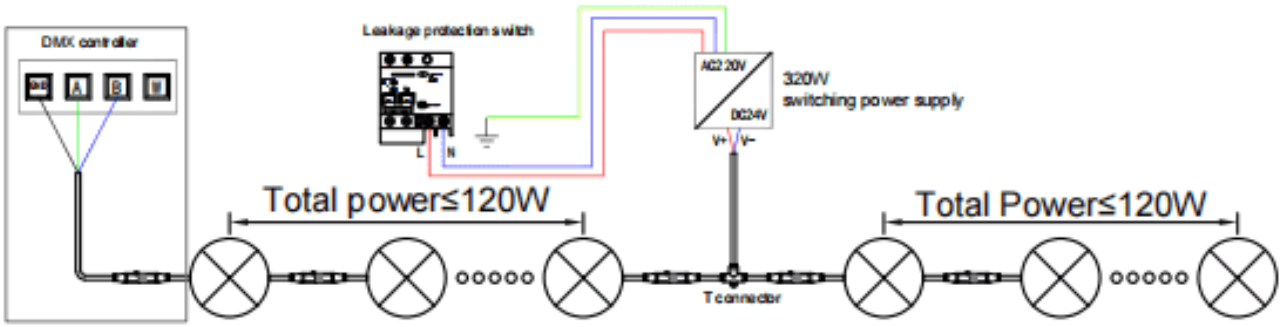

Remark:Single color don't need controller

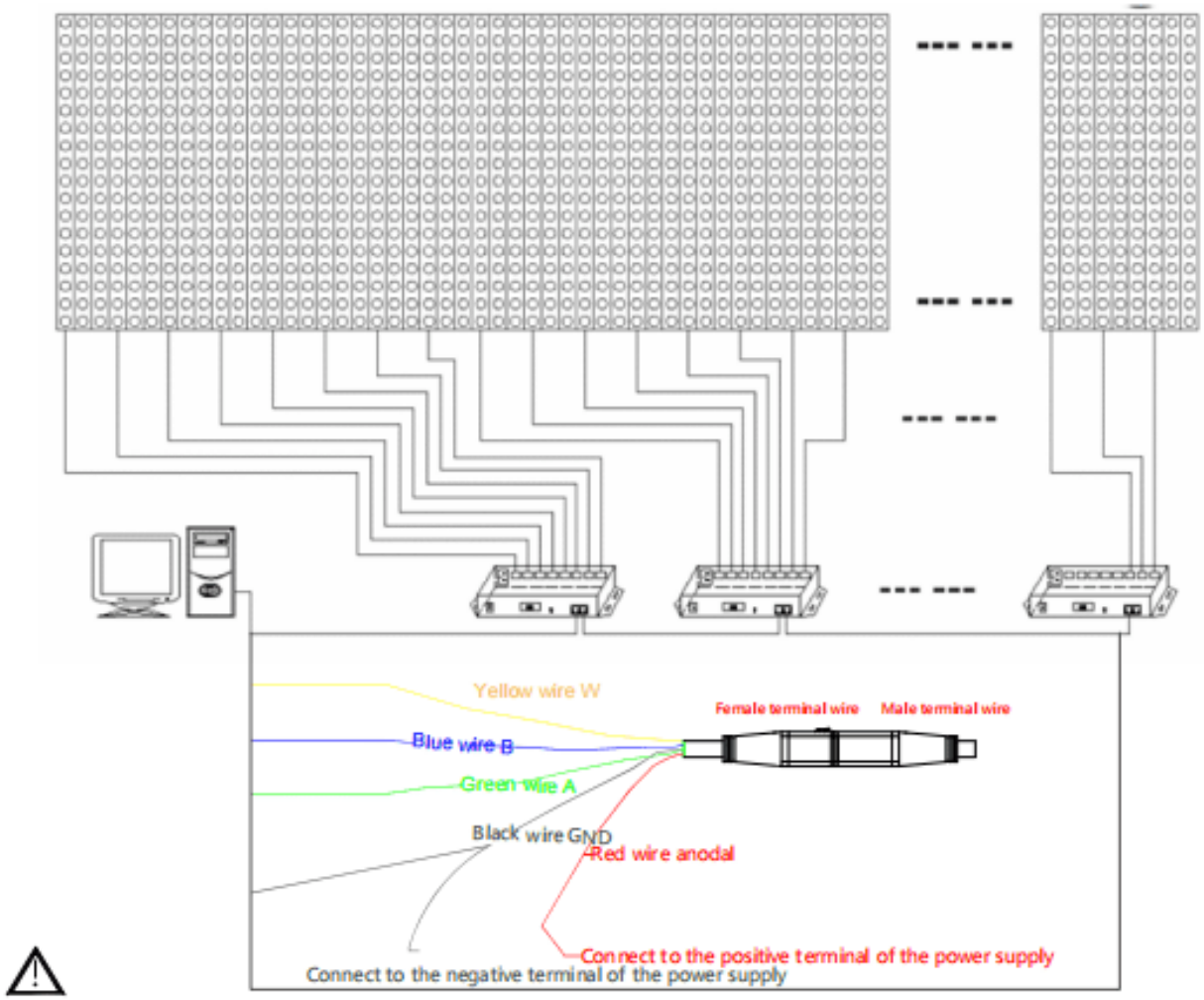

1. Need to consider the diameter of main cable when several fixtures connect together, and the loaded current of main cable need to more than the total current of all fixtures.

2.Need to choose the suitable leakage protection switch for power distribution, also need to pay attention on fixture driver, cable length and wet environment might increase leakage current.